1-22-145 / D1x: Aluminium explosion/flameproof

D1xS1R 110dB(A) Radial Alarm Horn Sounder

The D1xS1R is a performance certified alarm horn sounder with a compact, omni-directional horn and a sound output of up to 110dB(A). The robust Type 4/4X, IP66 marine grade, corrosion proof aluminium enclosure is approved for Class I & II Div 1, Zone 1 & 20, IECEx and ATEx Zone 1 & 2 explosion proof signalling applications.

Featuring 64 alarm tones, each of the 4 stage/channels can be remotely activated. The threaded flameproof joint, multiple cable entries and duplicated, pluggable termination simplifies both installation and routine maintenance. The 24Vdc version is approved for public mode fire alarm use and the 100-240Vac version for general signalling use. SIL1 & SIL2 Route 2H compliant to IEC61508 (2010) as standard.

Features

- Maximum sound pressure level output of 110dB(A)
- Choice of 64 alarm tone frequencies
- 4 remotely selectable alarm stages/channels
- Positive or negative line stage/channel switching
- Automatic synchronisation on multi-sounder system
- Ratchet adjustable 316 stainless steel bracket
- Available with custom tone configurations and frequencies
- Robust marine grade aluminium enclosure
- UL464 Public mode fire alarm use
- CAN/ULC S525 Audible Signaling Devices for Fire Alarm



Approvals

- UL/cUL/ULC File ref: E230764
- IECEx certificate: IECEx ULD 19.0008X
- ATEX certificate: DEMKO 19 ATEX 2141X
- CSFM listing: 7136-2279:0506
- UKCA certificate: UL21UKEX2132X
- INMETRO IEx 24.0158X
- DNV certificate: TAA00003HM
- SIL1 & SIL2 compliant to IEC61508 (2010)

Coding

- NEC / CEC Class / Zone
  Class I Zone 1 IIC T5 Ta -55°C to +85°C
  Class I Zone 1 IIC T6 Ta -55°C to +75°C
- NEC / CEC Class / Div
  Class I Div 1 ABCD T5 Ta -55°C to +85°C
  Class I Div 1 ABCD T6 Ta -55°C to +75°C
- IECEx / ATEX
  II 2G Ex db IIC T5 Gb Ta -55°C to +75°C
  II 2G Ex db IIC T6 Gb Ta -55°C to +70°C
  II 2D Ex tb IIIC T82°C Db Ta 55°C to +75°C
- Product version: D
- NEC / CEC Class / Zone
  Zone 20 IIIB Ta -55°C to +70°C
- NEC / CEC Class / Div
  Class II Div 1 FG T6 Ta -55°C to +70°C
  See product manual for full voltage specific coding.



Specification

Maximum output:	110dB(A) @ 1 metre [101dB(A) @ 10ft/3m] Class II version: 94dB(A) @ 1 metre [85dB(A) @ 10ft/3m]
Nominal output:	105dB(A) @ 1m +/- 3dB – Tone 4 [96dB(A) @ 10ft/3m] Class II version: 90dB(A) @ 1 metre [81dB(A) @ 10ft/3m]
No. of tones:	64 (UKOOA / PFEER compliant)
No. of stages:	4
Volume control:	Full range
Effective range:	125m/410ft @ 1KHz
Voltages DC:	24Vdc (11.5-54Vdc)
Voltages AC:	230Vac (100-240Vac)
In-rush:	815mA within 4ms @ 24Vdc
Stage switching:	DC units: positive or negative AC units: common supply line
Safety Integrity Level:	SIL1 and SIL2 Route 2H IEC61508 (2010)
Ingress protection:	EN60529: IP66/67 UL50E / NEMA250: 4 / 4X / 3R / 13
Enclosure material:	Marine grade LM6 aluminium alloy
Enclosure colour:	Red or Grey, custom colours available on request
Enclosure finish:	Chromate & powder coated finish ISO 12944-6 CX, C5VH & C5H
Cable entries:	1×1/2"NPT & 2xM20 Thread adaptors available
Stopping plugs:	Brass, Nickel Plated or Stainless Steel
Terminals:	0.5 – 2.5mm² (20-14AWG) – 12AWG solid core conductor Pluggable & duplicated terminals
Line monitoring:	Blocking diode included EOL Min. 500 Ohm 2W, or 3k3 Ohm 0.5W resistor or diode (DC versions) can be fitted
Ground/Earth stud:	M5
Enclosure volume:	<2 litres
Installation temp:	-55 to +85°C [-67° to +185°F]
Storage temp:	-55 to +85°C [-67° to +185°F]
Relative humidity:	99%
Vibration test:	35Hz for a duration 4Hr (UL464)
Jarring test:	3ft/lb Energy (UL464)
Impact test:	3x 5lb (UL464)
MTBF DC:	225.16 years / 1,972,386 hours – MIL 217
MTBF AC:	138.96 years / 1,217,285 hours – MIL 217
Weight:	4.00kg/8.80lbs

Part Codes

Part Code:	Identifier:	Description:
Product type:	D1xS1	D1xS1 alarm horn sounder
Horn type:	R	Radial omni-directional horn
Voltage:	DC024	11.5-54Vdc
	AC230	100-240Vac
Cable entries:[e]	A	2 x M20x1.5mm & 1 × 1/2"NPT
	B	2 × 1/2"NPT – adaptors
	C	2 × 3/4"NPT – adaptors
	D	2 x M25x1.5mm – adaptors
	F	1 × 3/4"NPT – adaptor
	G	1 x M25x1.5mm – adaptor
Stopping plug/ adaptor material: [m]	B	Brass
	N	Nickel plated brass
	S	Stainless steel
Bracket material: [s]	1	A4 316 Stainless Steel
	3	A4 316 St/St with Equip. Tag
	5	A4 316 St/St with Equip. Tag and Duty Label
Product version: [v]	A	UL, cUL, ULC, IECEx, ATEX, PESO, CSFM, DNV, INMETRO – SIL1 & SIL2 Route 2H
	S	UL, cUL, ULC, IECEx, ATEX, PESO, CSFM, DNV – SIL2 Route 1H with diagnostics SFF: >99%
	T	IECEx, ATEX, PESO, DNV, INMETRO – Telephone/Relay initiate
	D	Class II – UL, cUL
Product option: [o]	1	Standard product
	Z	Custom alarm tone software – contact E2S
	X	Custom configuration – contact E2S
	Y	Stage control Config. 4
	K	Stage control Config. 5 (DC) and Config. 2 (AC)
	V	Stage control Config. 6
	R	Reverse polarity stage control (DC) Config. 7
Enclosure colour: [x]	R	Red
	G	Grey
	S	Special colour – contact E2S

Accessories:

SP65-0001-A4	Pole Mount Bracket Kit St/St A4 (316)
SP65-0003-A4	Sunshade – St/St A4 (316)

Alarm stage control:	Please review the installation manual and wiring schematics for remote stage control and EOL resistor monitoring configuration options:
Config. 1 [DC]:	Factory default. Common negative, positive switching. Up to 4 Alarm Stages. EOL monitoring Alarm Stage 1 only
Config. 2 [DC]:	User setting. Common positive, negative switching. Up to 4 Alarm Stages. EOL monitoring Alarm Stage 1 only
Config. 3 [DC]:	User setting. Common positive, negative switching activation of Stages 1 & 2 EOL on both. Reverse polarity monitoring
Config. 4 [DC]:	Product option 'Y'. Independent activation of Alarm Stages 1 & 2 with EOL on both stages. Forward polarity monitoring
Config. 5 [DC]:	Product option 'K'. Horn continuously powered. Voltage free activation of up to 3 alarm stages
Config. 6 [DC]:	Product option 'V'. Independent activation of up to 4 Alarm Stages with EOL on all stages. Forward polarity monitoring
Config. 7 [DC]:	Product option 'R'. Reverse polarity selection of Stage 1 and Stage 2
Config. 1 [AC]:	Factory default. Up to 4 Alarm Stages. Stage 1 activated at power on. Stages 2, 3 and 4 via volt free contacts
Config. 2 [AC]:	Product option 'K'. Horn continuously powered. Voltage free activation of up to 3 alarm stages

Current Consumption

Nominal Voltage:	Voltage range:	Nominal current:	Max. current:	In-rush:
12Vdc	11.5-54Vdc	221mA	221mA	-
24Vdc	11.5-54Vdc	185mA	221mA	815mA <4ms
48Vdc	11.5-54Vdc	115mA	221mA	-
115Vac 50/60Hz	100-260V ac	73mA	80mA	-
230Vac 50/60Hz	100-260V ac	48mA	80mA	-

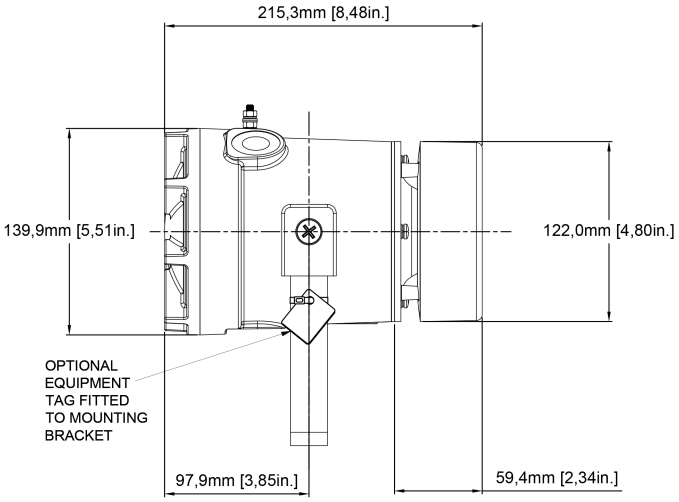

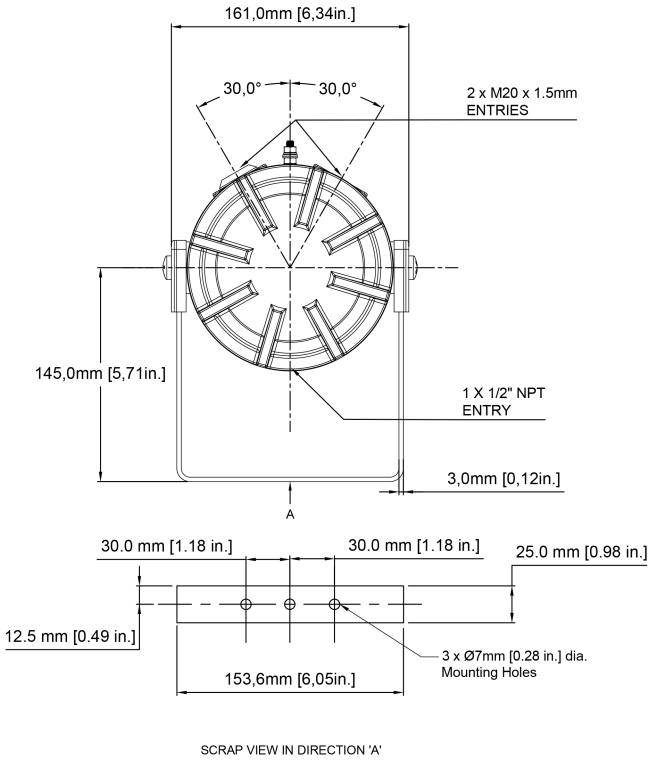

Assemblies

The D1xS1R is available as a plated assembly configured with Xenon strobe or LED beacons with or without a D1xJ2 Ex d junction box.

Contact E2S for further information.

Tone table

S 1	Description	S 2	S 3	S 4
T 1	1000 Continuous - PFEER Toxic Gas	Any	T 2	T 44
T 2	1200/500 @ 1Hz Sweeping - DIN / PFEER P.T.A.P.	Any	T 3	T 44
T 3	1000 @ 0.5Hz (1s on, 1s off) Intermittent - P...	Any	T 2	T 44
T 4	1.4KH-1.6KHz 1s, 1.6KHz-1.4KHz 0.5s - NF C 48...	Any	T 24	T 1
T 5	544(100mS)/440 (400mS) - NF S 32-001	Any	T 19	T 1
T 6	1500/500 - (0.5s on , 0.5s off) x3 + 1.5s gap...	Any	T 44	T 1
T 7	500-1500Hz Sweeping 2 sec on 1 sec off - AS4428	Any	T 44	T 1
T 8	500/1200Hz @ 0.26Hz(3.3s on, 0.5s off) - NEN ...	Any	T 24	T 35
T 9	1000 (1s on, 1s off)x7 + (7s on, 1s off) - IM...	Any	T 34	T 1
T 10	1000 (1s on, 1s off)x7 + (7s on, 1s off) - IM...	Any	T 34	T 1
T 11	420(0.5s on, 0.5s off)x3 + 1.5s gap - ISO 820...	Any	T 1	T 8
T 12	1000(0.5s on, 0.5s off)x3 + 1.5s gap - ISO 82...	Any	T 1	T 8
T 13	422/775 - (0.85 on, 0.5 off) x3 + 1.5s gap ...	Any	T 1	T 8
T 14	1000/2000 @ 1Hz - Singapore	Any	T 3	T 35
T 15	300 Continuous	Any	T 24	T 35
T 16	440 Continuous	Any	T 24	T 35
T 17	470 Continuous	Any	T 24	T 35
T 18	500 Continuous - IMO code 2 (Low)	Any	T 24	T 35
T 19	554 Continuous	Any	T 24	T 35
T 20	660 Continuous	Any	T 24	T 35
T 21	800 Continuous - IMO code 2 (High)	Any	T 24	T 35
T 22	1200 Continuous	Any	T 24	T 35
T 23	2000 Continuous	Any	T 3	T 35
T 24	2400 Continuous	Any	T 20	T 35
T 25	440 @ 0.83Hz (0.60s on, 0.60s off) Intermittent	Any	T 44	T 8
T 26	470 @ 0.9Hz (0.55s on, 0.55s off) Intermittent	Any	T 44	T 8
T 27	470 @ 5Hz (0.10s on, 0.10s off) Intermittent	Any	T 44	T 8
T 28	544 @ 1.14Hz (0.43s on, 0.44s off) Intermittent	Any	T 24	T 8
T 29	655 @ 0.875Hz (0.57s on, 0.57s off) Intermittent	Any	T 44	T 8
T 30	660 @ 0.28Hz (1.80s on, 1.80s off) Intermittent	Any	T 24	T 8
T 31	660 @ 3.3Hz (0.15s on, 0.15s off) Intermittent	Any	T 24	T 8
T 32	745 @ 1Hz (0.50s on, 0.50s off) Intermittent	Any	T 24	T 8
T 33	800 (0.25s on, 1.00s off) Intermittent	Any	T 24	T 8
T 34	800 @ 2Hz (0.25s on, 0.25s off) - IMO code 3....	Any	T 24	T 8
T 35	1000 @ 1Hz (0.50s on, 0.50s off) Intermittent	Any	T 24	T 8
T 36	2400 @ 1Hz (0.50s on, 0.50s off) Intermittent	Any	T 24	T 8
T 37	2900 @ 5Hz (0.10s on, 0.10s off) Intermittent	Any	T 24	T 8
T 38	363/518 @ 1Hz (0.50s / 0.50s) Alternating	Any	T 8	T 19
T 39	450/500 @ 2Hz (0.25s / 0.25s) Alternating	Any	T 8	T 19
T 40	554/440 @ 1Hz (0.50s / 0.50s) Alternating	Any	T 24	T 19
T 41	554/440 @ 0.65Hz (0.76s / 0.76s) Alternating	Any	T 8	T 19
T 42	561/760 @ 0.83Hz (0.60s / 0.60s) Alternating	Any	T 8	T 19
T 43	780/600 @ 0.96Hz (0.52s / 0.52s) Alternating	Any	T 8	T 19
T 44	800/1000 @ 2Hz (0.25s / 0.25s) Alternating	Any	T 24	T 19
T 45	970/800 @ 2Hz (0.25s / 0.25s) Alternating	Any	T 8	T 19
T 46	800/1000 @ 0.875Hz (0.57s / 0.57s) Alternating	Any	T 24	T 19
T 47	2400/2900 @ 2Hz (0.25s / 0.25s) Alternating	Any	T 24	T 19
T 48	500/1200 @ 0.3Hz (1.67s / 1.67s) Sweeping	Any	T 24	T 12
T 49	560/1055 @ 0.18Hz (2.73s / 2.73s) Sweeping	Any	T 24	T 12
T 50	560/1055 @ 3.3Hz (0.15s / 0.15s) Sweeping	Any	T 24	T 12
T 51	600/1250 @ 0.125Hz (4s / 4s) Sweeping	Any	T 24	T 12
T 52	660/1200 @ 1Hz (0.50s / 0.50s) Sweeping	Any	T 24	T 12
T 53	800/1000 @ 1Hz (0.50s / 0.50s) Sweeping	Any	T 24	T 12
T 54	800/1000 @ 7Hz (0.07s / 0.07s) Sweeping	Any	T 24	T 12
T 55	800/1000 @ 50Hz (0.01s / 0.01s) Sweeping	Any	T 24	T 12
T 56	2400/2900 @ 7Hz (0.07s / 0.07s) Sweeping	Any	T 24	T 12
T 57	2400/2900 @ 1Hz (0.50s / 0.50s) Sweeping	Any	T 24	T 12
T 58	2400/2900 @ 50Hz (0.01s / 0.01s) Sweeping	Any	T 24	T 12
T 59	2500/3000 @ 2Hz (0.25s / 0.25s) Sweeping	Any	T 24	T 12
T 60	2500/3000 @ 7.7Hz (0.65s / 0.65s) Sweeping	Any	T 24	T 12
T 61	800Hz Motor Siren	Any	T 24	T 12
T 62	1200Hz Motor Siren	Any	T 24	T 12
T 63	2400Hz Motor Siren	Any	T 24	T 12
T 64	Simulated Bell	Any	T 21	T 12

No liability is accepted for any consequence of the use of this document. The technical specification of this unit is subject to change without notice due to our policy of continual product development. All dimensions are approximate. This unit is sold subject to our standard conditions of sale, a copy of which is available on request.