1-32-025 / D2x: Aluminium hazardous location

D2xS1 116dB(A) Alarm Horn Sounder - Warning Siren

The D2xS1 is a high output, 116dB(A) alarm horn sounder. Low current consumption and high SPL in a compact robust Type 4/4X, IP66 enclosure ensure the D2xS1 is suitable for all haz loc fire alarm system and general signalling applications.

The corrosion proof, marine grade aluminium die cast enclosure is chromated and powder coated providing resilience in the harshest of environments. One device, globally certified: ATEX, IECEx Zone 2 & 22; NEC/CEC CI D2 and CII D2; NEC CI Zone 2 and Zone 22; CEC Zone 2 & 22 and CII D2. UL, cUL & ULC approved 24Vdc version for public mode fire alarm use.

Features

- High output, up to 116dB(A)
- 4 remotely selectable alarm stages/channels
- Choice of 64 alarm tone frequencies
- Automatic synchronisation on multi-sounder system
- UL464 Fire Alarm
- CAN/ULC-S525 Fire Alarm
- Dual cable entries
- Supplied with haz loc rated stopping plugs/adaptors

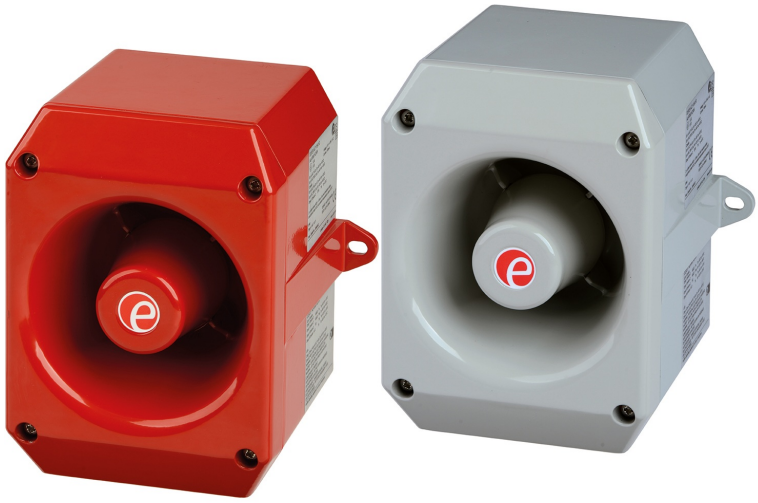

Approvals

- UL File ref: E230764
- IECEx cert: IECEx ULD 14.0004X
- ATEX cert: DEMKO 14 ATEX 4786493904X
- CSFM listing: 7136-2279:0503
- Ex EAC certified: EAC RU C GB.AA71.B.00273/20
- SIL1 & SIL2 compliant to IEC61508 (2010)

Coding

- NEC / CEC:
  Class I Div 2 ABCD T3C Ta -40°C to +70°C
  Class I Div 2 ABCD T4 Ta -40°C to +65°C, T4A Ta -40°C to +50°C
  Class II Div 2 FG T5 Ta -40°C to +50°C, T6 Ta -40°C to +45°C
  Class III Div 1&2 Ta -40°C to +50°C
- NEC:
  Class I, Zone 2 AEx ec IIC T4 Gc Ta -40°C to +50°C
  Zone 22 AEx tc IIIC T90°C Dc Ta -40°C to +50°C
- CEC:
  Class I Zone 2 Ex ec IIC T4 Gc X Ta -40°C to +50°C
  Zone 22 Ex tc IIIC T90°C Dc Ta -40°C to +50°C
- IECEx & ATEX:
  II 3G Ex ec IIC T4 Gc Ta -40°C to +50°C
  II 3D Ex tc IIIC T90°C Dc Ta -40°C to +50°C
  See product manual for full voltage specific coding.



Specification

Maximum output:	116dB(A) @ 1 metre [107dB(A) @ 10ft/3m]
Nominal output:	112dB(A) @ 1m +/- 3dB – Tone 2 [103dB(A) @ 10ft/3m]
No. of tones:	64 (UKOOA / PFEER compliant)
No. of stages:	4
Volume control:	Adjustable -12dB(A) [Tone 2]
Effective range:	125m/410ft @ 1KHz
Synchronisation:	Automatic synchronisation
Voltages DC:	24V dc (10-30V dc); 48V dc (38-58V dc
Voltages AC:	115V ac 50/60Hz; 230V ac 50/60Hz
Stage switching:	DC units: negative or positive AC units: common supply line
Ingress protection:	EN60529: IP66 UL50E / NEMA250: 4 / 4X / 3R / 13
Enclosure material:	Marine grade aluminium LM6
Enclosure finish:	Chromate & powder coated finish ISO 12944-6 CX, C5VH & C5H
Enclosure colour:	Red or Grey, custom colours available on request
Cable entries:	2 x M20 x 1.5mm threaded gland entries Adaptors available to 1/2"NPT, 3/4"NPT and M25
Terminals:	0.5 – 2.5mm² (20-14 AWG)
Grounding stud:	M5
Operating temp:	-40 to +70°C [-40° to +158°F] – Class I Div 2 -40 to +50°C [-40° to +122°F] – All other markings
Relative humidity:	99% – tropicalised/conformal coated electronics
Weight:	DC: 2.48kg/4.96lbs AC:2.73kg/5.46lbs

Part Codes

Part Code:	Identifier:	Description:
Product type:	D2xS1	Haz Loc alarm horn sounder
Voltage:	DC024	24V dc – UL/cUL Fire Alarm
	DC048	48V dc
	AC115	115V ac
	AC230	230V ac
Cable Entry Type: [e]	A	2 x M20x1.5mm
	B	2 × 1/2" NPT – adaptors
	C	2 × 3/4" NPT – adaptors
	D	2 x M25x1.5mm – adaptors
	E	1 × 1/2" NPT – adaptor
	F	1 × 3/4" NPT – adaptor
	G	1 x M25x1.5mm – adaptor
Stopping plug/ adaptor material: [m]	N	Nickel Plated
	S	Stainless Steel
Equipment tag: [s]	1	No equip. tag
	3	With equip. tag
	5	With equip. tag and duty label
Product version: [v]	A	UL, cUL, ULC, IECEx, ATEX, CSFM, Ex EAC
Product option: [o]	1	Standard product
	X	Custom configuration – contact E2S
Enclosure colour: [x]	R	Red
	G	Grey
	S	Special colour – contact E2S
Accessories:		
SP65-0001-A4		Pole Mount Bracket Kit St/St A4 (316)
SP65-0003-A4		Sunshade – St/St A4 (316)

Current Consumption

Nominal Voltage:	In rush:	Voltage range:	Nominal operating< current:
24V dc	1800mA <9.0ms	10-30V dc	313mA [at nominal voltage]
48V dc		38-58V dc	181mA [at nominal voltage]
115V ac 50/60Hz		+/-10%	90mA
230V ac 50/60Hz		+/-10%	52mA

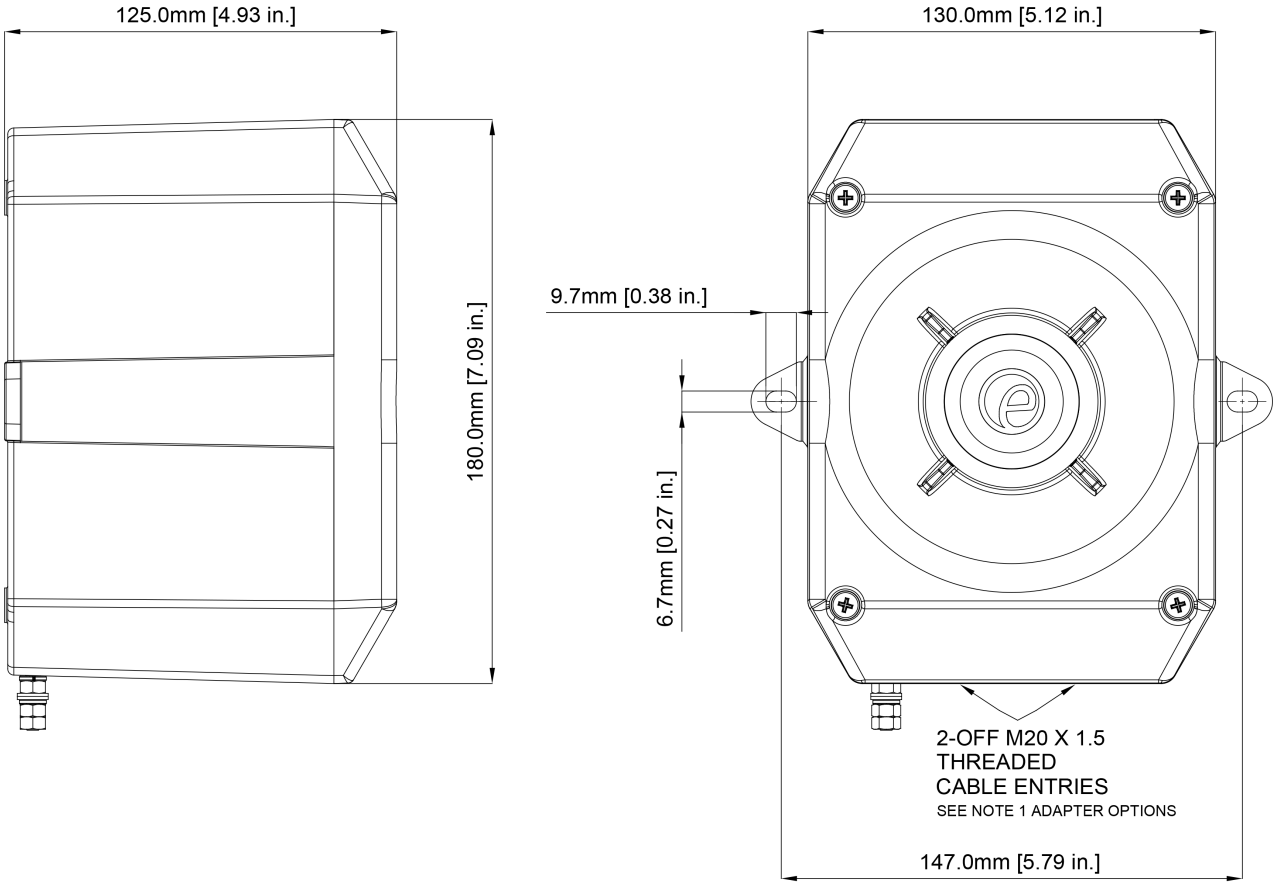

Assemblies

The D2xS1 type alarm horn sounder is available as an assembly with D2x type Xenon strobe or LED beacons with or without a D2xJ1 junction box. Contact E2S for further information.

Tone table

S 1	Description	S 2	S 3	S 4
T 1	1000 Continuous - PFEER Toxic Gas	T 3	T 2	T 44
T 2	1200/500 @ 1Hz Sweeping - DIN / PFEER P.T.A.P.	T 1	T 3	T 44
T 3	1000 @ 0.5Hz (1s on, 1s off) Intermittent - P...	T 1	T 2	T 44
T 4	1.4KH-1.6KHz 1s, 1.6KHz-1.4KHz 0.5s - NF C 48...	T 44	T 24	T 1
T 5	544(100mS)/440 (400mS) - NF S 32-001	T 52	T 19	T 1
T 6	1500/500 - (0.5s on , 0.5s off) x3 + 1.5s gap...	Any	T 44	T 1
T 7	500-1500Hz Sweeping 2 sec on 1 sec off - AS4428	Any	T 44	T 1
T 8	500/1200Hz @ 0.26Hz(3.3s on, 0.5s off) - NEN ...	Any	T 24	T 35
T 9	1000 (1s on, 1s off)x7 + (7s on, 1s off) - IM...	Any	T 34	T 1
T 10	1000 (1s on, 1s off)x7 + (7s on, 1s off) - IM...	Any	T 34	T 1
T 11	420(0.5s on, 0.5s off)x3 + 1.5s gap - ISO 820...	Any	T 1	T 8
T 12	1000(0.5s on, 0.5s off)x3 + 1.5s gap - ISO 82...	Any	T 1	T 8
T 13	422/775 - (0.85 on, 0.5 off) x3 + 1.5s gap ...	Any	T 1	T 8
T 14	1000/2000 @ 1Hz - Singapore	T 23	T 3	T 35
T 15	300 Continuous	T 44	T 24	T 35
T 16	440 Continuous	T 44	T 24	T 35
T 17	470 Continuous	T 44	T 24	T 35
T 18	500 Continuous - IMO code 2 (Low)	T 44	T 24	T 35
T 19	554 Continuous	T 64	T 24	T 35
T 20	660 Continuous	T 44	T 24	T 35
T 21	800 Continuous - IMO code 2 (High)	T 44	T 24	T 35
T 22	1200 Continuous	T 44	T 24	T 35
T 23	2000 Continuous	T 15	T 3	T 35
T 24	2400 Continuous	T 48	T 20	T 35
T 25	440 @ 0.83Hz (0.60s on, 0.60s off) Intermittent	T 1	T 44	T 8
T 26	470 @ 0.9Hz (0.55s on, 0.55s off) Intermittent	T 1	T 44	T 8
T 27	470 @ 5Hz (0.10s on, 0.10s off) Intermittent	T 1	T 44	T 8
T 28	544 @ 1.14Hz (0.43s on, 0.44s off) Intermittent	T 44	T 24	T 8
T 29	655 @ 0.875Hz (0.57s on, 0.57s off) Intermittent	T 1	T 44	T 8
T 30	660 @ 0.28Hz (1.80s on, 1.80s off) Intermittent	T 44	T 24	T 8
T 31	660 @ 3.3Hz (0.15s on, 0.15s off) Intermittent	T 30	T 24	T 8
T 32	745 @ 1Hz (0.50s on, 0.50s off) Intermittent	T 44	T 24	T 8
T 33	800 (0.25s on, 1.00s off) Intermittent	T 53	T 24	T 8
T 34	800 @ 2Hz (0.25s on, 0.25s off) - IMO code 3....	T 56	T 24	T 8
T 35	1000 @ 1Hz (0.50s on, 0.50s off) Intermittent	T 44	T 24	T 8
T 36	2400 @ 1Hz (0.50s on, 0.50s off) Intermittent	T 21	T 24	T 8
T 37	2900 @ 5Hz (0.10s on, 0.10s off) Intermittent	T 53	T 24	T 8
T 38	363/518 @ 1Hz (0.50s / 0.50s) Alternating	T 1	T 8	T 19
T 39	450/500 @ 2Hz (0.25s / 0.25s) Alternating	T 1	T 8	T 19
T 40	554/440 @ 1Hz (0.50s / 0.50s) Alternating	T 44	T 24	T 19
T 41	554/440 @ 0.65Hz (0.76s / 0.76s) Alternating	T 1	T 8	T 19
T 42	561/760 @ 0.83Hz (0.60s / 0.60s) Alternating	T 1	T 8	T 19
T 43	780/600 @ 0.96Hz (0.52s / 0.52s) Alternating	T 1	T 8	T 19
T 44	800/1000 @ 2Hz (0.25s / 0.25s) Alternating	T 5	T 24	T 19
T 45	970/800 @ 2Hz (0.25s / 0.25s) Alternating	T 1	T 8	T 19
T 46	800/1000 @ 0.875Hz (0.57s / 0.57s) Alternating	T 53	T 24	T 19
T 47	2400/2900 @ 2Hz (0.25s / 0.25s) Alternating	T 57	T 24	T 19
T 48	500/1200 @ 0.3Hz (1.67s / 1.67s) Sweeping	T 44	T 24	T 12
T 49	560/1055 @ 0.18Hz (2.73s / 2.73s) Sweeping	T 44	T 24	T 12
T 50	560/1055 @ 3.3Hz (0.15s / 0.15s) Sweeping	T 44	T 24	T 12
T 51	600/1250 @ 0.125Hz (4s / 4s) Sweeping	T 44	T 24	T 12
T 52	660/1200 @ 1Hz (0.50s / 0.50s) Sweeping	T 64	T 24	T 12
T 53	800/1000 @ 1Hz (0.50s / 0.50s) Sweeping	T 56	T 24	T 12
T 54	800/1000 @ 7Hz (0.07s / 0.07s) Sweeping	T 57	T 24	T 12
T 55	800/1000 @ 50Hz (0.01s / 0.01s) Sweeping	T 54	T 24	T 12
T 56	2400/2900 @ 7Hz (0.07s / 0.07s) Sweeping	T 57	T 24	T 12
T 57	2400/2900 @ 1Hz (0.50s / 0.50s) Sweeping	T 47	T 24	T 12
T 58	2400/2900 @ 50Hz (0.01s / 0.01s) Sweeping	T 54	T 24	T 12
T 59	2500/3000 @ 2Hz (0.25s / 0.25s) Sweeping	T 44	T 24	T 12
T 60	2500/3000 @ 7.7Hz (0.65s / 0.65s) Sweeping	T 44	T 24	T 12
T 61	800Hz Motor Siren	T 44	T 24	T 12
T 62	1200Hz Motor Siren	T 44	T 24	T 12
T 63	2400Hz Motor Siren	T 44	T 24	T 12
T 64	Simulated Bell	T 44	T 21	T 12

No liability is accepted for any consequence of the use of this document. The technical specification of this unit is subject to change without notice due to our policy of continual product development. All dimensions are approximate. This unit is sold subject to our standard conditions of sale, a copy of which is available on request.